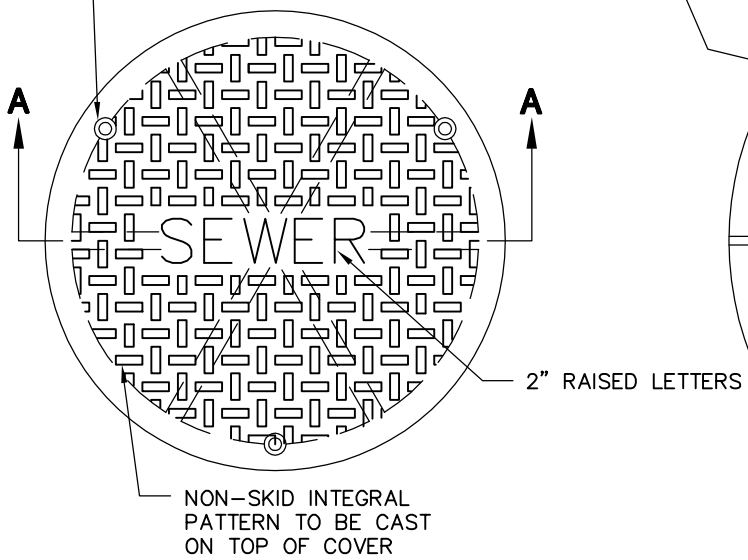

COVER PLAN

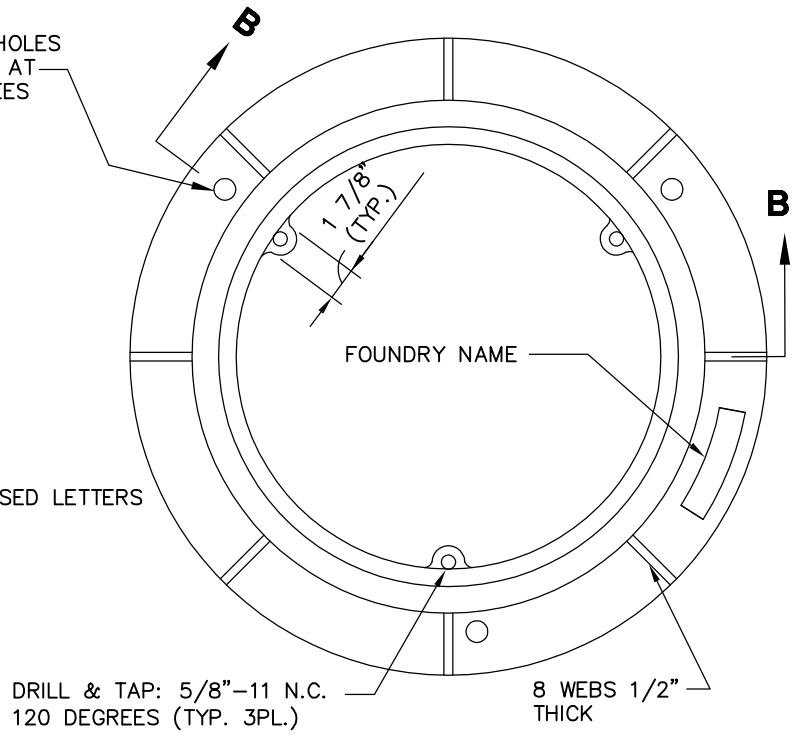

RING PLAN

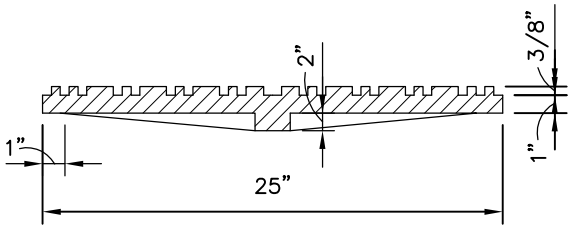

SECTION A-A

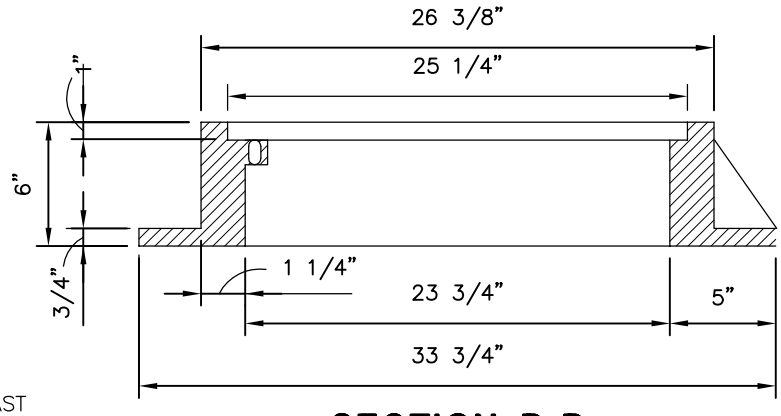

SECTION B-B

GENERAL NOTES:
MANHOLE RING AND COVER SHALL BE EAST JORDAN IRON WORKS MODEL 370063, OLYMPIC FOUNDARY MODEL MH30AD/T, OR EQUAL.

COVER NOTES:

1. USE WITH THREE LOCKING BOLTS 5/8"-11 NC STAINLESS TYPE 304 STEEL SOCKET HEAD (ALLEN HEAD) BOLTS, 3" LONG. DRILL HOLES SPACED 120°,TO MATCH HOLES IN RING.
2. COVER MATERIAL IS DUCTILE IRON ASTM A536 GRADE 80-55-06.
3. SHALL CONFORM TO SEC. 9-05.15 OF THE STANDARD PECIFICATIONS, AS MODIFIED HEREIN.
4. APPROXIMATE WEIGHT OF COVER IS 150 LBS.
5. RATING - H30.

RING NOTES:

1. DRILL AND TAP THREE 5/8"-11 NC HOLES THROUGH RING AT 120°.
2. RING MATERIAL IS GREY IRON, ASTM A- 48 CLASS 30.
3. SHALL CONFORM TO SEC. 9-05.15 OF THE STANDARD SPECIFICATIONS, AS MODIFIED HEREIN.
4. APPROXIMATE WEIGHT OF RING IS 215 LBS.
5. RATING - H30.

STANDARD MANHOLE FRAME AND COVER

Silver Lake Water and Sewer District
STANDARD DETAILS